Summary in Graph

Exam Summary (GO Classes CS Test Series 2026 | Digital Logic | Subject Wise Test 2)

Qs. Attempted:	0 (0 + 0)	Correct Marks:	0 (0 + 0)
Correct Attempts:	0 (0 + 0)	Penalty Marks:	0 (0 + 0)
Incorrect Attempts:	0 (0 + 0)	Resultant Marks:	0 (0 + 0)

Total Questions:	25 (5 + 20)
Total Marks:	45 (5 + 40)
Exam Duration:	75 Minutes
Time Taken:	0 Minutes

Individual Question Statistics

Select Metric: Marks Obtained

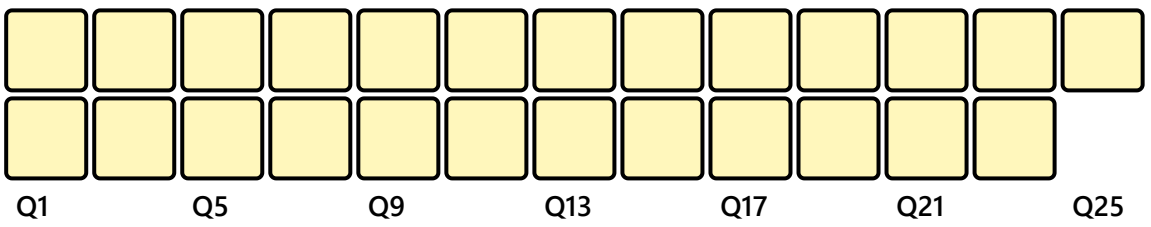

* Average Stats based on first-attempt stats of Top 10% (17) out of 171 users

EXAM RESPONSE EXAM STATS FEEDBACK

Technical

Q #1 Multiple Choice Type Award: 1 Penalty: 0.33 Digital Logic

Consider the logic circuit shown in the figure below.

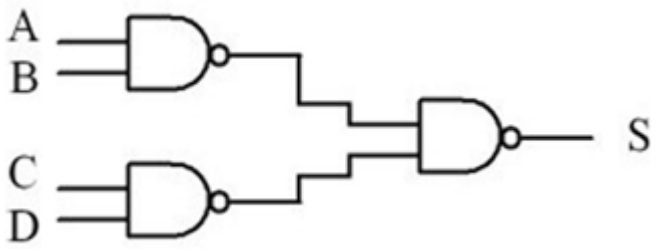

Considering the logical formula that **defines** the Boolean function implemented by this circuit, select the **CORRECT** option.

A. $S = \overline{(A \wedge B) \wedge (C \wedge D)}$

B. $S = \overline{(A \vee B)} \wedge \overline{(C \vee D)}$

C. $S = \overline{(A \vee B)} \vee \overline{(C \vee D)}$

D. NONE OF THE ABOVE

Your Answer: | Correct Answer: D | Not Attempted | Time taken: 00min 00sec | Discuss

Q #2 | Multiple Select Type | Award: 1 | Penalty: 0 | Digital Logic

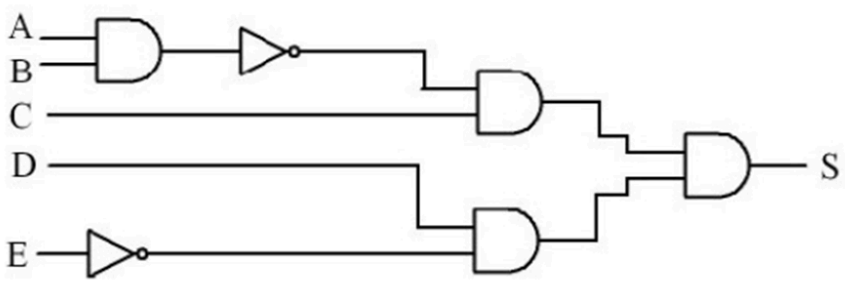

Analyze the following statements.

I. The circuit shown is a sequential circuit.

II. The circuit shown is a combinational circuit.

III. The circuit shown implements a four-state Mealy machine.

IV. The circuit shown implements a four-state Moore machine.

The analysis allows us to conclude that

A. statements I and II are true.

B. statement III is true.

C. statement IV is true.

D. statement II is true.

Your Answer: | Correct Answer: D | Not Attempted | Time taken: 00min 00sec | Discuss

Q #3 | Multiple Choice Type | Award: 1 | Penalty: 0.33 | Digital Logic

What is the function of the circuit below?

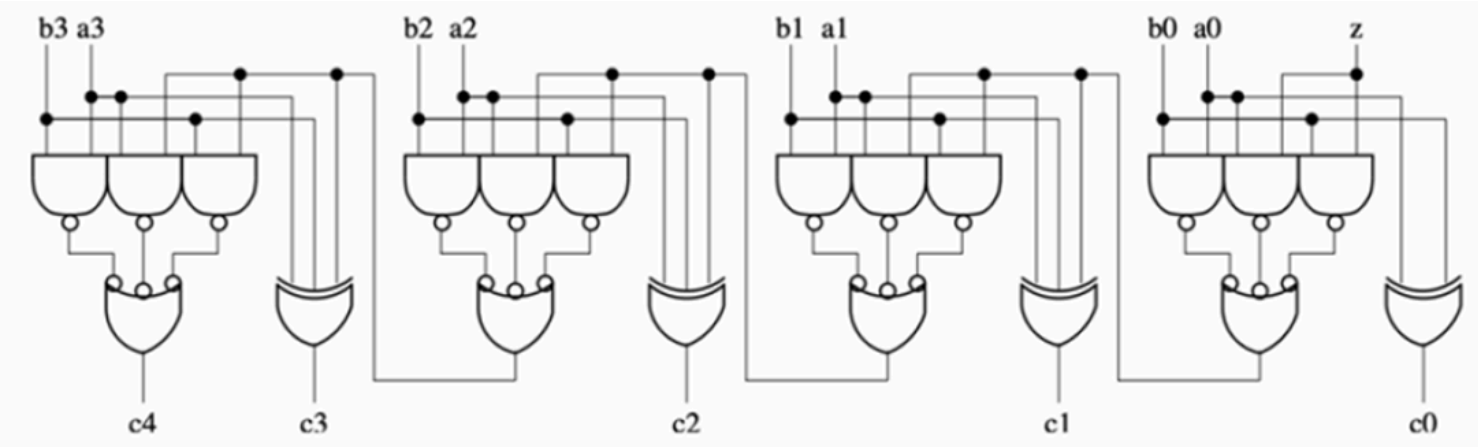

A. multiplexer

B. multiplier

C. shifter

D. adder

Your Answer: | Correct Answer: D | Not Attempted | Time taken: 00min 00sec | Discuss

Q #4 | Multiple Choice Type | Award: 1 | Penalty: 0.33 | Digital Logic

Considering A and B two logical variables, the expression $(\mathrm{not}(\mathrm{A})$ and $\mathrm{B})$ or $(\mathrm{A}$ and $\mathrm{not}(\mathrm{B}))$ assumes the value true:

A. for all values of A and B

B. whenever A is equal to B

C. whenever A is different from B

D. whenever A is false

Your Answer: | Correct Answer: C | Not Attempted | Time taken: 00min 00sec | Discuss

Q #5 | Multiple Choice Type | Award: 1 | Penalty: 0.33 | Digital Logic

Consider the following Boolean expressions:

A. $(a \cdot b) + (c \cdot d \cdot e)$

B. $(a \cdot b) \cdot (c \cdot d \cdot e)$

C. $(a + b) \cdot (c + d + e)$

D. $\overline{(a + b)} + \overline{(c + d + e)}$

Consider the following statements:

I. A is equivalent to B.

II. C is equivalent to D.

III. A is equivalent to D.

IV. B is equivalent to C.

Which of the above options are true?

A. Only statements I and III are true.

B. Only statements II and IV are true.

C. All statements are true.

D. All statements are false.

Your Answer: | Correct Answer: D | Not Attempted | Time taken: 00min 00sec | Discuss

Q #6 | Multiple Choice Type | Award: 2 | Penalty: 0.67 | Digital Logic

Observe the logic circuit below.

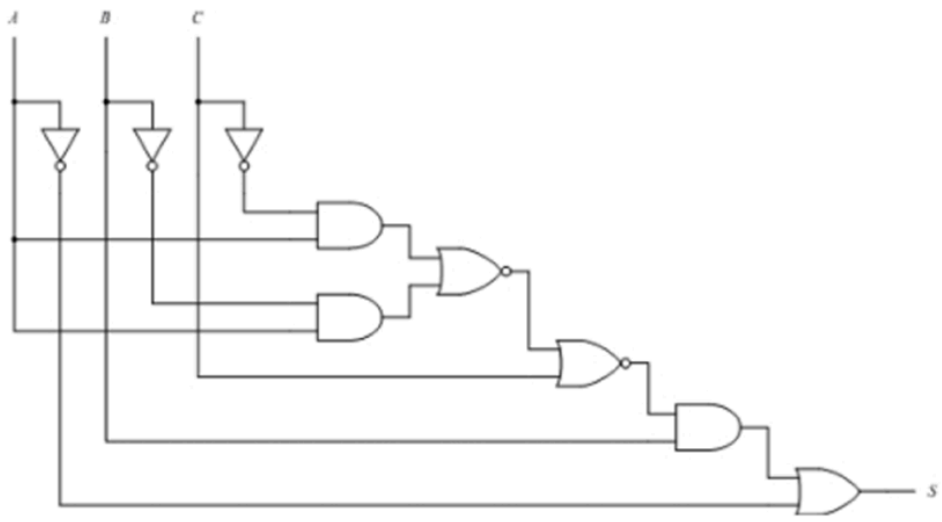

The Boolean expression for output S of the circuit shown is

A. $\bar{A} + B \cdot \bar{C}$

B. $A + \bar{B} \cdot C$

C. $\bar{B} + A \cdot C$

D. $\bar{A} \cdot \bar{B} \cdot \bar{C}$

Your Answer: | Correct Answer: A | Not Attempted | Time taken: 00min 00sec | Discuss

Q #7 | Multiple Select Type | Award: 2 | Penalty: 0 | Digital Logic

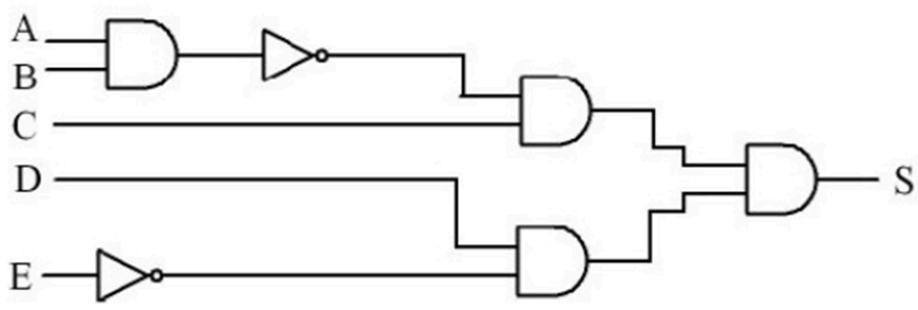

Considering the digital circuit shown, analyze the following statements.

I. The Boolean function implemented by the circuit can be defined by: $\mathrm{S} = \mathrm{AB} + \mathrm{CD} + \mathrm{E}$

II. The Boolean function implemented by the circuit can be defined by: $\mathrm{S} = (\mathrm{A} + \mathrm{B})(\mathrm{C} + \mathrm{D})\mathrm{E}$

III. The Boolean function implemented by the circuit can be defined by: $\mathrm{S} = (\mathrm{ABC}) + (\mathrm{DE})$

The analysis allows us to conclude that

A. statement III is true.

B. none of the statements are true.

C. statement I is true.

D. statement II is true.

Your Answer: | Correct Answer: B | Not Attempted | Time taken: 00min 00sec | Discuss

Q #8 | Multiple Select Type | Award: 2 | Penalty: 0 | Digital Logic

Consider the multiplexer circuit in the following figure

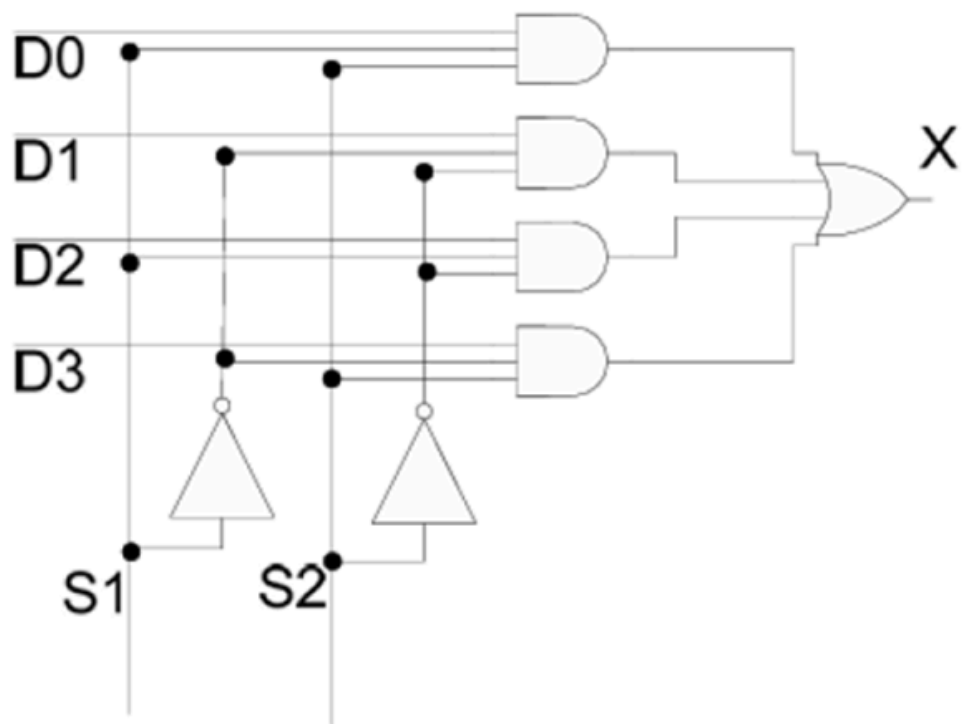

Consider the following statements:

I. If $\mathrm{S1} = 0$ and $\mathrm{S2} = 0$, then X will always have the same value as $\mathrm{D1}$

II. If $\mathrm{S1} = 0$ and $\mathrm{S2} = 1$, then X will always have the same value as $\mathrm{D2}$

III. If $\mathrm{S1} = 1$ and $\mathrm{S2} = 1$, then X will always have the same value as $\mathrm{D0}$

Select the **CORRECT** option:

A. statement I is correct.

B. statement II is correct.

C. statement III is correct.

D. Only statements I and II are correct.

Your Answer: | Correct Answer: A;C | Not Attempted | Time taken: 00min 00sec | Discuss

Q #9 | Multiple Choice Type | Award: 2 | Penalty: 0.67 | Digital Logic

Considering a function described in its canonical form as the sum of products by minterms $3, 7, 11, 12, 13, 14$, and 15 of a Karnaugh map, and considering variable A as the highest logical order term, B as the second highest order term, C as the third highest order term, and D as the lowest logical order term, determine its minimized logical representation.

A. $A'B + CD$

B. $AB + CD$

C. $AB' + CD$

D. $A'B' + CD$

Your Answer: | Correct Answer: B | Not Attempted | Time taken: 00min 00sec | Discuss

Q #10 | Multiple Choice Type | Award: 2 | Penalty: 0.67 | Digital Logic

Based on your knowledge of sequential circuit design, consider the following statements.

I. The design of sequential circuits using flip-flops is critical due to the problem known as flip-flop transparency.

II. Since a flip-flop is known to be sensitive to one of the clock edges, the dwell time of the clock at the high or low level is no longer critical to the operation of the sequential circuit.

III. Setup time is the time during which the input must be kept stable before the active transition of the clock.

IV. A D-type flip-flop can be implemented with two D-type latches or with one D-type latch and an edge detector circuit.

Select the correct option.

A. Only statements I and IV are correct.

B. Only statements II and III are correct.

C. Only statements III and IV are correct.

D. Only statements I, II, and III are correct.

Your Answer: | Correct Answer: C | Not Attempted | Time taken: 00min 00sec | Discuss

Q #11 Multiple Choice Type | Award: 2 | Penalty: 0.67 | Digital Logic

Consider the circuit shown below.

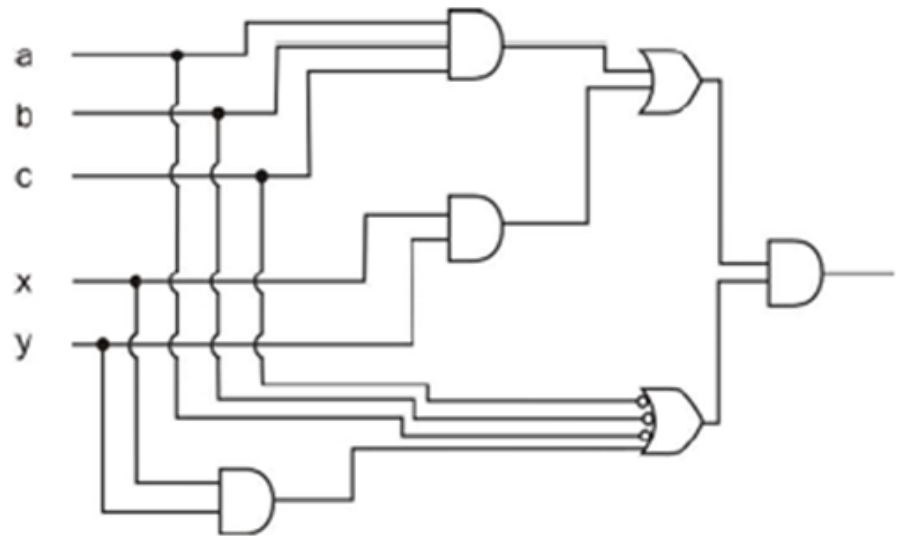

Select the option that correctly shows the resulting simplified circuit.

A.

B. 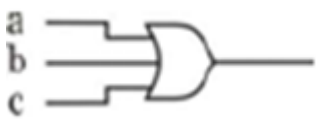

C.

D. 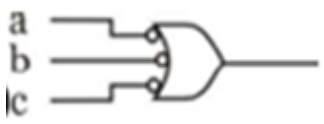

Your Answer: | Correct Answer: A | Not Attempted | Time taken: 00min 00sec | Discuss

Q #12 Multiple Choice Type | Award: 2 | Penalty: 0.67 | Digital Logic

Following figure shows a counter circuit built from JK flip-flops.

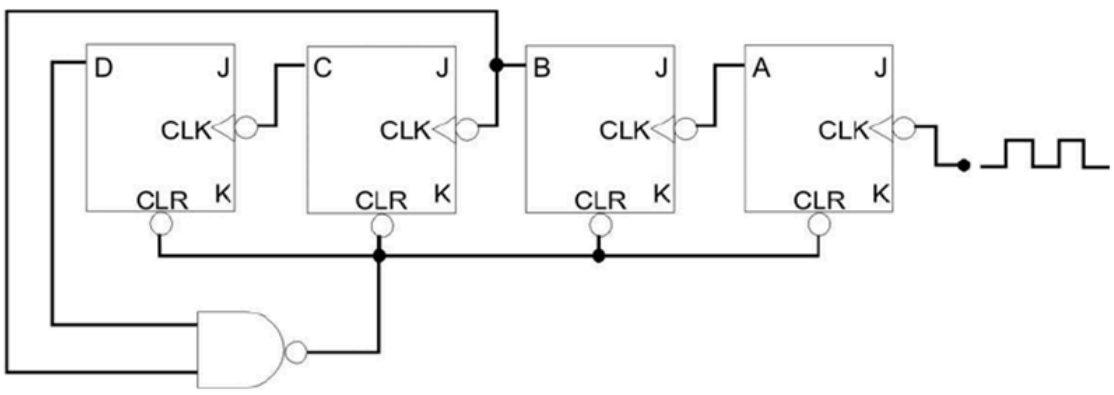

Considering that letters A, B, C, and D represent the outputs of the flip-flops and that inputs J and K of all

flipflops are permanently at a high level, select the option that correctly presents the type of counter in the figure.

A. Synchronous module 10.

B. Asynchronous (ripple) with a modulus of 10.

C. Asynchronous (ripple) with a modulus of 13.

D. Synchronous module 13.

Your Answer: | Correct Answer: B | Not Attempted | Time taken: 00min 00sec | Discuss

Q #13 Multiple Select Type | Award: 2 | Penalty: 0 | Digital Logic

Analyze the following diagram.

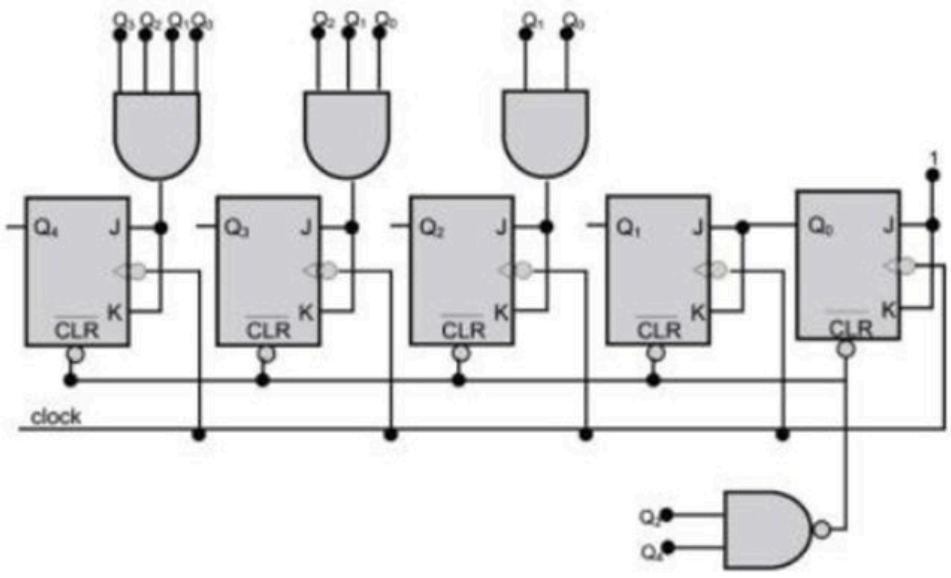

Which of the following is/are correct?

A. The counter performs a sequential and increasing count.

B. The module of this counter is 20.

C. The counter is of the asynchronous type (ripple counter).

D. Replacing JK flip-flops with SR (Set-Reset) flip-flops does not change its operation as a binary counter.

Your Answer: | Correct Answer: A;B | Not Attempted | Time taken: 00min 00sec | Discuss

Q #14 Multiple Choice Type | Award: 2 | Penalty: 0.67 | Digital Logic

Consider the function $\mathrm{F}(\mathrm{A}, \mathrm{B}, \mathrm{C}, \mathrm{D})$, composed of the minimum terms (minterm)$= \{1, 3, 5, 7, 9\}$ and the non-essential terms (don't care)$= \{6, 12, 13\}$. This function, as a product of sums, can be simplified as follows:

A. $\mathrm{D}' + \mathrm{A}^{*}\mathrm{C}$

B. $\mathrm{D}^{*}\left(\mathrm{A}' + \mathrm{C}'\right)$

C. $(D^*A') + (D^*C')$

D. $D^*A' + A^*B'^*C'^*D$

Your Answer: | Correct Answer: B | Not Attempted | Time taken: 00min 02sec | Discuss

Q #15 Numerical Type | Award: 2 | Penalty: 0 | Digital Logic

Two's complement representation is a binary representation of numbers with a sign that uses the most significant bit as a sign bit, which makes it easier to test whether an integer is positive or negative. According to the two's complement representation rule, the conversion of the number -32658 corresponds to the number: Give answer as binary representation in 2's complement using exactly 16 bits.

Your Answer: | Correct Answer: 1000000001101110 | Not Attempted | Time taken: 00min 00sec | Discuss

Q #16 Multiple Choice Type | Award: 2 | Penalty: 0.67 | Digital Logic

What is the complement of the function $f = (x + \overline{y})(yz + x\overline{y})$

A. $\bar{f} = \bar{x} + y\bar{z}$

B. $\bar{f} = \bar{x} + \overline{xz} + y$

C. $\bar{f} = x\bar{z} + y$

D. $\bar{f} = x\bar{y} + yz$

Your Answer: | Correct Answer: A | Not Attempted | Time taken: 00min 00sec | Discuss

Q #17 Multiple Choice Type | Award: 2 | Penalty: 0.67 | Digital Logic

Consider four 4-variable Boolean functions f_1, f_2, f_3 expressed in sum-of-minterms (Σm) form:

- $f_1(A, B, C, D) = \sum(0, 1, 2, 4, 5)$
- $f_2(A, B, C, D) = \sum(0, 4, 8, 12)$
- $f_3(A, B, C, D) = \sum(1, 2, 5, 9)$
- $f_4(A, B, C, D) = \sum(1, 5)$

The Circuit

The functions are processed through the following logic gates to produce the final output $\mathbf{Z}$:

1. f_1 and f_2 are the inputs to an $\mathbf{OR}$ gate. Let the output be G_1.
2. f_3 and f_4 are the inputs to an $\mathbf{AND}$ gate. Let the output be G_2.
3. G_1 and G_2 are the inputs to an $\mathbf{XOR}$ gate. The final output is $\mathbf{Z}$.

A. $Z = \sum(0, 2, 4, 8, 12)$

B. $Z = \sum(0, 1, 2, 4, 8, 12)$

C. $Z = \sum(0, 2, 4, 5, 8, 12)$

D. $Z = \sum(1, 5, 9)$

Your Answer: | Correct Answer: A | Not Attempted | Time taken: 00min 00sec | Discuss

Q #18 | Numerical Type | Award: 2 | Penalty: 0 | Digital Logic

Consider the 4-variable Karnaugh map (variables w, x, y, z) given below, where $\mathbf{X}$ represents "don't care" and a blank cell represents $\mathbf{0}$.

AB \ CD	00	01	11	10
00	0	0	0	0
01	1	1	X	1
11	X	1	X	1
10	1	1	1	1

Assume for all inputs (w, x, y, z), the respective complements $(\bar{w}, \bar{x}, \bar{y}, \bar{z})$ are also available. The above logic is implemented using **2-input NAND gates only.**

The minimum number of gates required is _____ .

Your Answer: | Correct Answer: 1 | Not Attempted | Time taken: 00min 00sec | Discuss

Q #19 | Multiple Choice Type | Award: 2 | Penalty: 0.67 | Digital Logic

Consider the two cascaded $2 - \text{to} - 1$ multiplexers as shown in the logic diagram below.

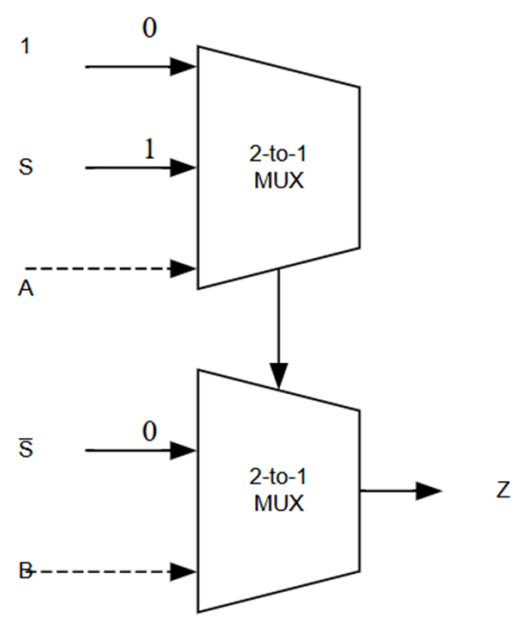

A. $\bar{B}\bar{S} + AB + BS$

B. $\bar{B}\bar{S} + \bar{A}B + BS$

C. $B\bar{S} + A\bar{B} + AS$

D. $\bar{A}\bar{B} + BS + AS$

Your Answer: | Correct Answer: B | Not Attempted | Time taken: 00min 00sec | Discuss

Q #20 Numerical Type | Award: 2 | Penalty: 0 | Digital Logic

Consider an 8-bit computer system that uses the following custom format for its registers:

- The **Most Significant Bit (MSB)** is a sign bit $(0$ for positive, 1 for negative$)$.
- The next $\mathbf{3}$ **bits** represent the integer part.
- The final $\mathbf{4}$ **bits** represent the fractional part (fixed-point).
- Negative numbers are stored using $\mathbf{2}$**'s complement representation** across the entire 8-bit string.

What is the decimal equivalent of the binary string $\mathbf{11001000}$ when interpreted using this specific 8-bit signed fixed-point format?

Your Answer: | Correct Answer: -3.5 | Not Attempted | Time taken: 00min 00sec | Discuss

Q #21 Multiple Choice Type | Award: 2 | Penalty: 0.67 | Digital Logic

A 4×1 multiplexer is used to implement a logic function $f(A, B, C)$. The select lines S_1 and S_0 are connected to variables A and B respectively. The inputs I_0 through I_3 are connected as follows: $I_0 = C, I_1 = \bar{C}, I_2 = 1, I_3 = 0$.

What is the simplified sum-of-products (SOP) form of the function $f(A, B, C)$?

A. $A\bar{B} + \bar{A}\bar{B}C + \bar{A}B\bar{C}$

B. $A\bar{B} + \bar{A}\bar{C} + \bar{B}C$

C. $\bar{A}\bar{B}\bar{C} + \bar{A}BC + AB$

D. $ABC + \bar{A}\bar{B}$

Your Answer: | Correct Answer: A | Not Attempted | Time taken: 00min 00sec | Discuss

Q #22 Numerical Type | Award: 2 | Penalty: 0 | Digital Logic

A logic circuit consists of two-input XOR gates. We want to implement a function that detects "odd parity" for a 4-bit input $WXYZ$ (i.e., the output is 1 if the number of 1s in the input is odd). What is the minimum number of 2-input XOR gates required to implement this 4-bit odd parity generator?

Your Answer: | Correct Answer: 3 | Not Attempted | Time taken: 00min 00sec | Discuss

Q #23 Multiple Choice Type | Award: 2 | Penalty: 0.67 | Digital Logic

Consider a 3-bit synchronous counter designed using T-flip-flops. The state transitions are defined such that the counter follows the sequence: $000 \rightarrow 010 \rightarrow 100 \rightarrow 110 \rightarrow 000 \ldots$ The unused states $(001, 011, 101, 111)$ are considered **"don't care"** conditions for the excitation logic.

If the current state of the counter is $Q2$, $Q1$, $Q0$ which of the following represents the minimized expression for the toggle input $T1$ of the second flipflop for the next state?

A. $T_1 = 0$

B. $T_1 = 1$

C. $T_1 = Q_2 \oplus Q_0$

D. $T_1 = \overline{Q_1}$

Your Answer: | Correct Answer: B | Not Attempted | Time taken: 00min 00sec | Discuss

Q #24 Numerical Type | Award: 2 | Penalty: 0 | Digital Logic

Consider an 8-bit ripple-carry adder used to add two integers, P and Q, represented in **2's complement** form. The delay of a half-adder is 10 ns and the delay of an OR gate used for carry propagation is 5 ns .

If the decimal value of P is 1 , what is the **INTEGER** decimal value of Q in the range $[-128, 127]$ that will lead to the **MAXIMUM** propagation delay (worst-case latency) for the sum to stabilize?

Your Answer: | Correct Answer: -1 | Not Attempted | Time taken: 00min 00sec | Discuss

Q #25 Multiple Choice Type | Award: 2 | Penalty: 0.67 | Digital Logic

A designer is asked to implement a D flip-flop using a JK flip-flop and additional combinational logic. The desired behavior is that the output Q should follow the input D on the next clock edge.

Which of the following represents the correct connections for the J and K inputs to achieve this D flip-flop behavior?

A. $J = D, K = 1$

B. $J = \bar{D}, K = D$

C. $J = D, K = \bar{D}$

D. $J = 1, K = \bar{D}$

Your Answer: | Correct Answer: C | Not Attempted | Time taken: 00min 00sec | Discuss

Copyright & Stuff